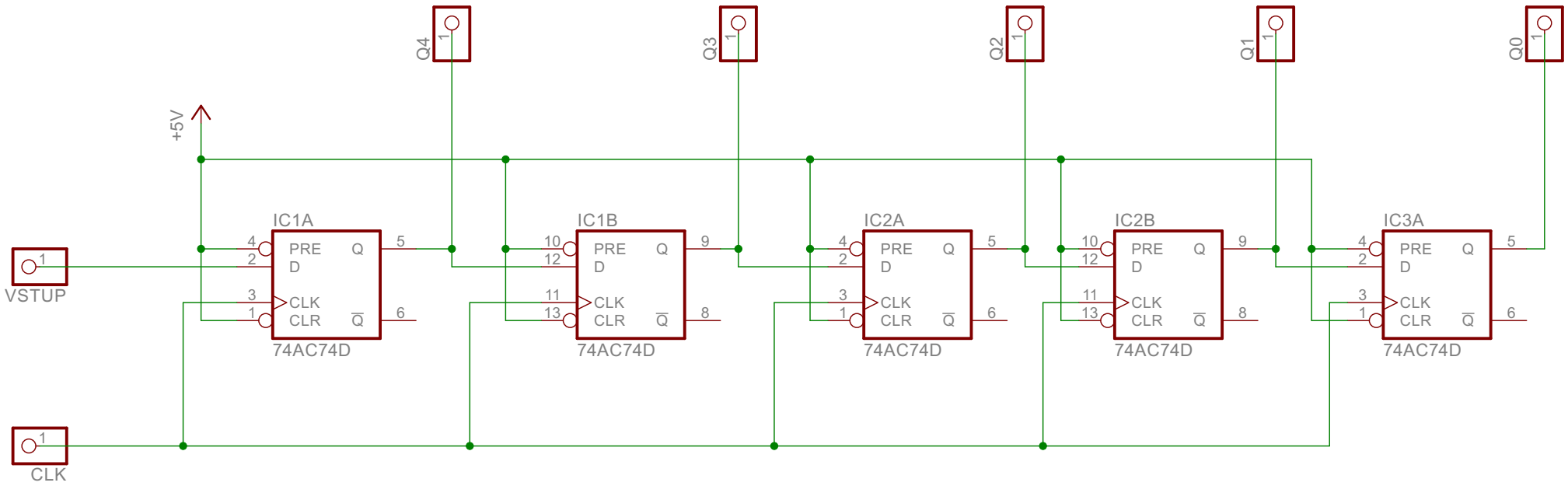

30.10.2020 17:33:43 f=1.20 C:\Users\kubalik\Vrh2018\diskP\2A\DI\Hradelka\vyuka\sekvencni_obvody\posuvny_registr\posuv.sch (Sheet: 1/1)